WSB40X

10" Medium-Duty Quik Stik Plus® Immersion Blender

BLEND

MAIN FEATURES

- ½ HP, variable speed, heavy-duty motor
- Completely sealed 10" stainless steel shaft is easily removable and dishwasher safe
- Rubberized comfort grip and trigger design enables ergonomic grip at any angle
- All-purpose, stainless steel blade
- 6-gallon, 24-quart capacity
- User-replaceable couplings on power pack and shaft
- Convenient cord wrap storage
- Limited One Year Warranty

ELECTRICAL

Voltage: 120

Frequency: 60Hz

Watts: 350

Amps: 2.9

Plug Type: NEMA 5.15P

Cord Length: 10 feet

SALES FEATURES

The Waring® WSB40X Quik Stik Plus® immersion blender delivers powerful medium-duty, precise blending for soups, sauces, purées, dressings, and more. Its ½ HP variable-speed motor drives a removable and sealed, dishwasher-safe 10" stainless steel shaft, while the rubberized grip and ergonomic trigger ensure comfortable control. With 6-gallon capacity, an all-purpose blade, user-replaceable couplings, and cord wrap storage, it's a durable, high-efficiency tool for demanding kitchens.

@waringproducts

©2026 Waring
1 Cummings Point Road, Stamford, CT 06902
Tel. 800-492-7464

waring.com

10" Medium-Duty Quik Stik Plus® Immersion Blender
WSB40X

10" Medium-Duty Quik Stik Plus® Immersion Blender
WSB40X

PARTS & ACCESSORIES

WSB40XPP Power Pack

WSB40XST 10" Stainless Steel Shaft

CAC207 WSB40X Coupling Replacement Kit

DIMENSIONS

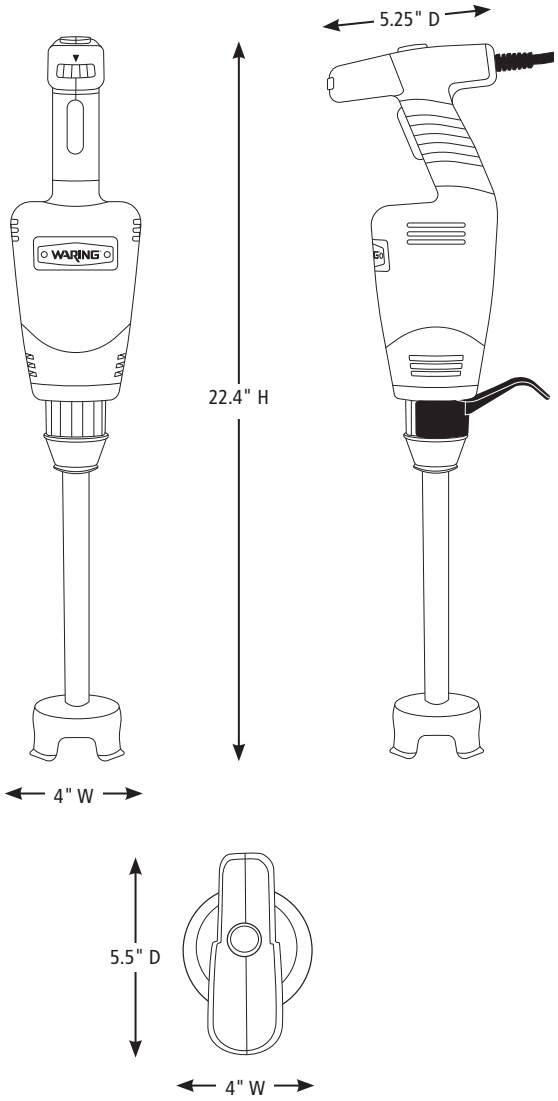

Out of Box Weight: 5.2 lb.

ORDERING INFORMATION	#STD. PKG.	GIFTBOX WEIGHT	CUBIC FEET	BOX DIMENSIONS D X W X H	UPC	CASE PKG.	MC WEIGHT	MC DIMENSIONS D X W X H	MBC
WSB40X – Quik Stik Plus® Immersion Blender	1	6.8 lb.	0.387	5.625" x 5.25" x 22.625"	040072107733	2	13.6	6.875" x 13.375" x 24"	10040072107730

@waringproducts

©2026 Waring
1 Cummings Point Road, Stamford, CT 06902
Tel. 800-492-7464

waring.com

26WC95146 / REV 10/26